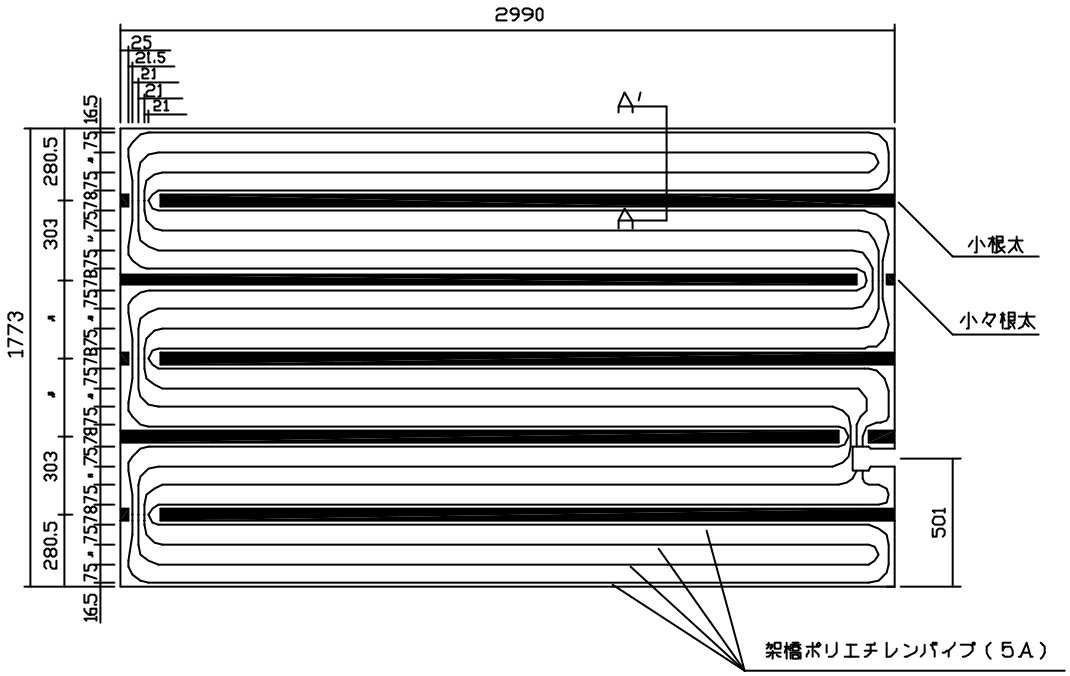
2990
25
21.5
21
21
21
16.5
280.5
75
75
75